CC4E Competence Center für Erneuerbare Energien & EnergieEffizienz

Hochschule für Angewandte Wissenschaften Hamburg
Hamburg University of Applied Sciences

2nd generation biofuels research at the Hamburg University of Applied Sciences (HUAS)

Prof. Dr.-Ing. Thomas Willner

thomas.willner@haw-hamburg.de

Research Group of Chemical Engineering

Hamburg University of Applied Sciences (HUAS)

Hamburg, Germany

COMSYN workshop, Karlsruhe 19 April 2018

Cooperation of HUAS & Nexxoil (spin-off) at the HUAS Campus Bergedorf in Hamburg, Germany (Laboratory & Technical Center)

Hochschule für Angewandte Wissenschaften Hamburg

Hamburg University of Applied Sciences

NEXXOIL

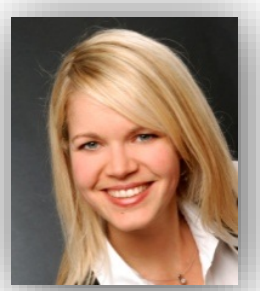

Prof. Dr.-Ing. Thomas Willner

Prof. Dr. Anika Sievers

Heads of the Chemical Engineering Research Group

Process Development: Laboratory & Technical Center (HUAS & Nexxoil)

Biomass (including Algae) and Waste

to Liquid Fuels

Bench-Scale and Pilot-Scale Test Plants up to 200 kg/Week

Prof. Dr.-Ing. Thomas Willner
Chemical Engineering
April 2018

Hochschule für Angewandte Wissenschaften Hamburg
Hamburg University of Applied Sciences

HUAS Approach for Fuels from Biomass and Waste

Biomass & Waste

Direct Lique-faction

300 - 500 °C

Oil

H_2

Hydro-treating & Refining

Liquid Hydrocarbon Drop-in Fuels

HUAS Approach = Direct Liquefaction

e.g. Biomass

50 % C
6 % H
44 % O

Direct Lique-faction

300 - 500 °C

Bio Oil

Water Phase

Bio Char

Gas

Main Tasks of Direct Liquefaction of Biomass

- Reduction of char formation
- Maximisation bio oil yield
- Reduction of oxygen

HUAS Approach of Direct Liquefaction = Organic Solvolysis

Biomass & Waste

→ **Organic Solvolysis** → Oil + … →

300 - 500 °C
Reaction Medium =
Heavy Oil (Sump Phase)

Chances

- Flexibility regarding feedstocks
- Reduction of char formation
- High yield of <u>low viscous</u> bio oil
- Reduction of heteroatoms (O, S, N)
- Low production costs

Challenges

- Stabilisation of the sump phase
- Separation of solids

Preliminary Work on Wood Liquefaction: Willner, Brunner/TUHH, 1993

Reduction of char formation by combination of H_2 pressure and recycle oil

80 bar

500 °C

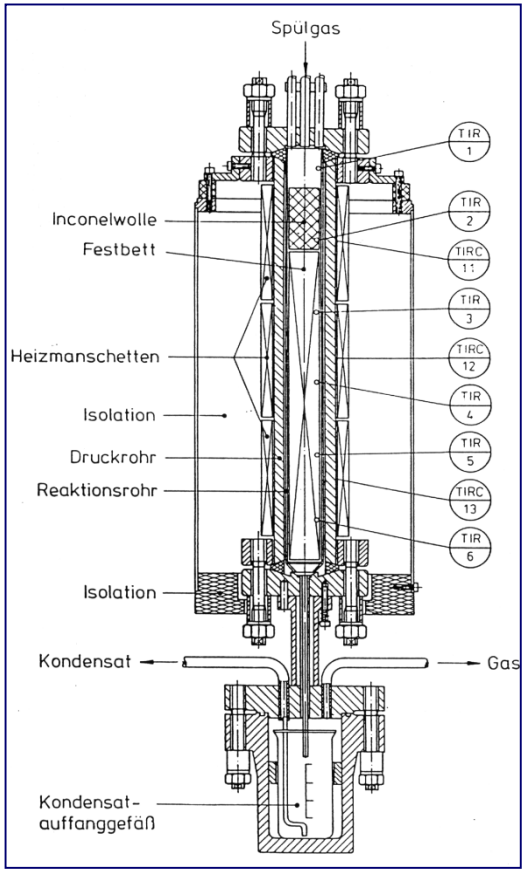

Source: Th. Willner: Thermische Holzumwandlung unter dem Einfluß von Wasserstoff und Wasser. Dissertation, TUHH 1993, S. 103

Preliminary Work on Wood Liquefaction: Willner, Brunner/TUHH, 1993

Reduction of char formation by combination of H_2 pressure and recycle oil

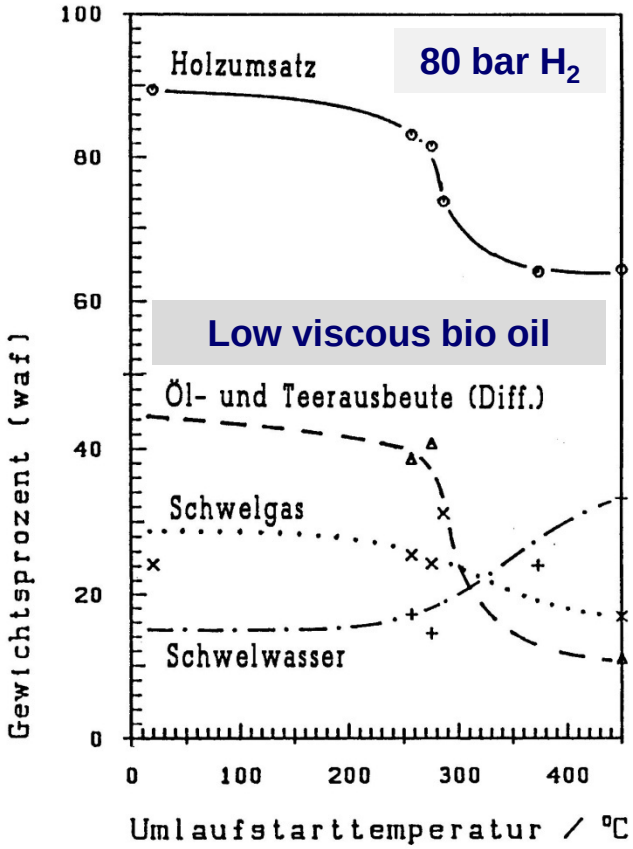

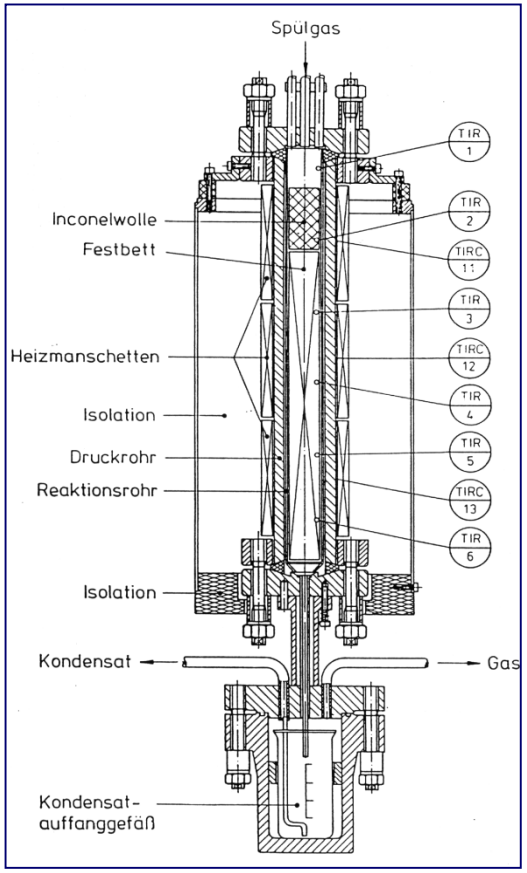

Source: Th. Willner: Thermische Holzumwandlung unter dem Einfluß von Wasserstoff und Wasser. Dissertation, TUHH 1993, S. 103

HUAS-Nexxoil READi™ Process

Biomass
& Waste

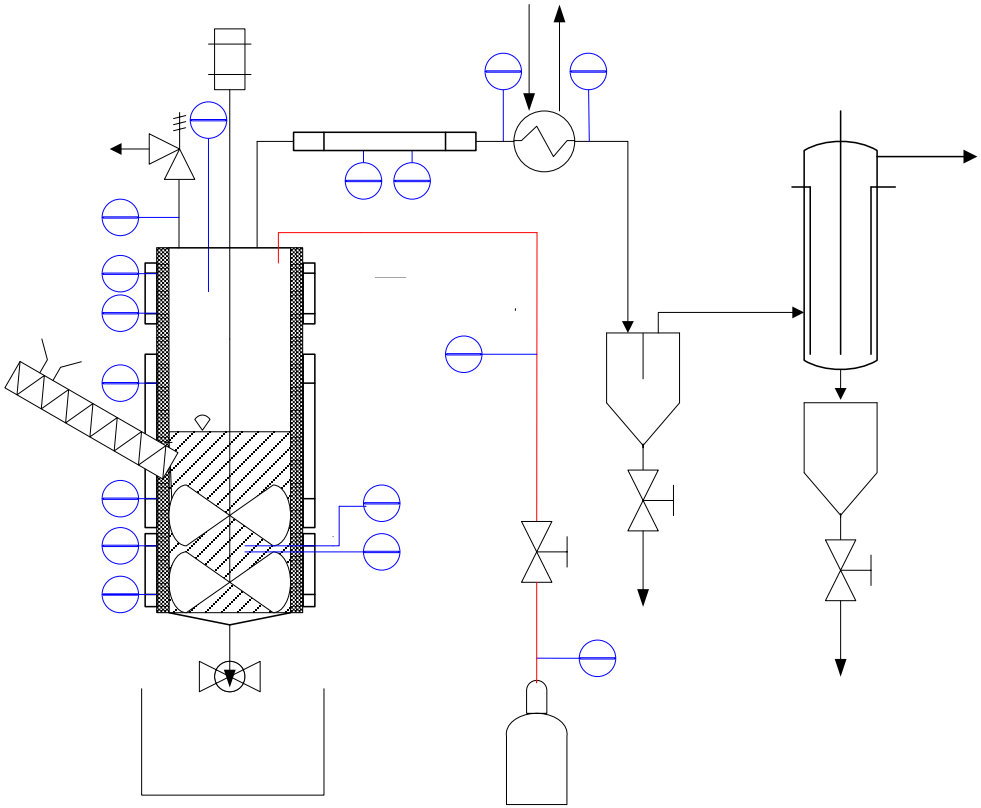

Oil

Robust and Competitive Sump Phase Process without Catalysts:
Biomass and Waste Conversion by Solvolytic Reactive Distillation

Prof. Dr.-Ing. Thomas Willner
Chemical Engineering
April 2018

Hochschule für Angewandte Wissenschaften Hamburg
Hamburg University of Applied Sciences

Reaction Scheme of Organic Solvolysis of Wood

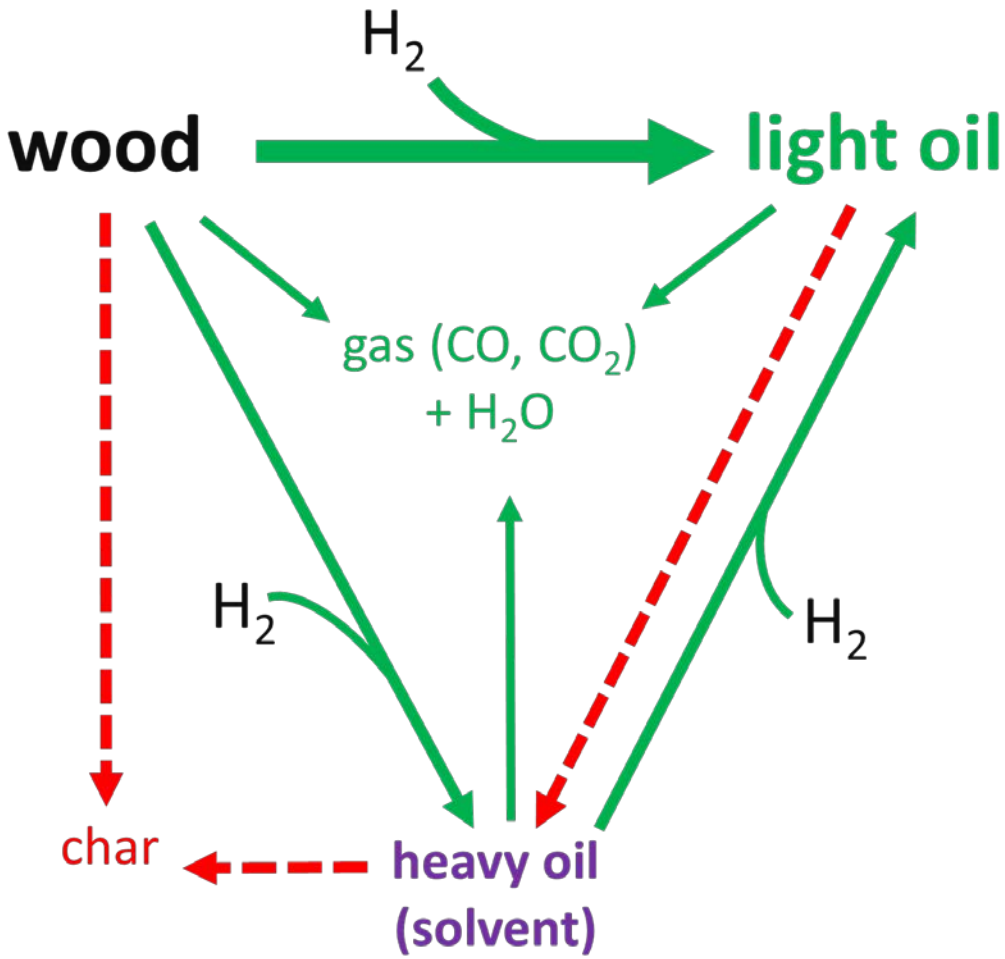

Proof of Solvolytic Effect of Softwood Tar for Wood Liquefaction (Continuous Feeding)

PhD project of D. Kröhnert 2011-2014

Process	Temperature °C	Feedstock	Pyrolytic oil wt.-%	Water wt.-%	**Solid residue wt.-%**	Gas + losses wt.-%	Source
Solvolytic liquefaction	280	Beech	16	31	**36**	17	[Kröhnert 2014]
Slow pyrolysis (80-90 bar)	300	Pine	2	26	**50**	22	[Willner, 1993]
Slow pyrolysis (5 K/min)	300	Pine	10.6	21	**53.8**	14.6	[Williams, 1996]
Slow pyrolysis (80 K/min)	300	Pine	6.4	21.6	**60.8**	11.2	[Williams, 1996]
Flash pyrolysis	300	Beech	36		**58**	6	[Beaumont, 1984]

Sources:

- D. Kröhnert: The Properties of Low-volatile Reaction Media in the Direct Thermochemical Liquefaction of Lignocellulosic Biomass. PhD Thesis, Hamburg University of Applied Sciences, Hamburg 2014
- O. Beaumont, Y. Schwob,: Influence of physical and chemical parameters on wood pyrolysis. Ind. Eng. Chem. Proc. Des. Dev. 23, 1984, 637-641
- P.T. Williams, S. Besler: The influence of temperature and heating rate on the slow pyrolysis of biomass. Renewable Energy. 7, 1996, 233-250
- T. Willner: Thermische Holzumwandlung unter dem Einfluß von Wasserstoff und Wasser. Dissertation. Hamburg University of Technology, Hamburg 1993

Challenge: Stabilisation of the Sump Phase

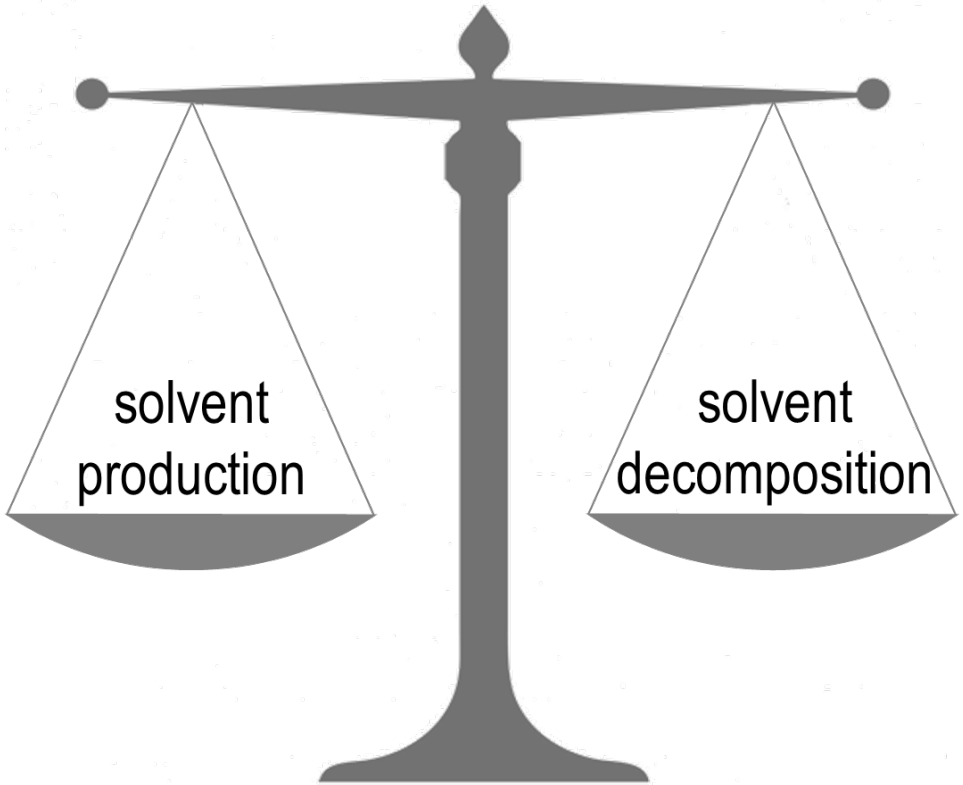

First Tests on Sump Phase Stabilisation for Solvolytic Wood Liquefaction (Continuous Feeding)

READEST project (FKZ 22013610) 2013-2015

With support from

Federal Ministry of Food and Agriculture

by decision of the German Bundestag

Fachagentur Nachwachsende Rohstoffe e.V.

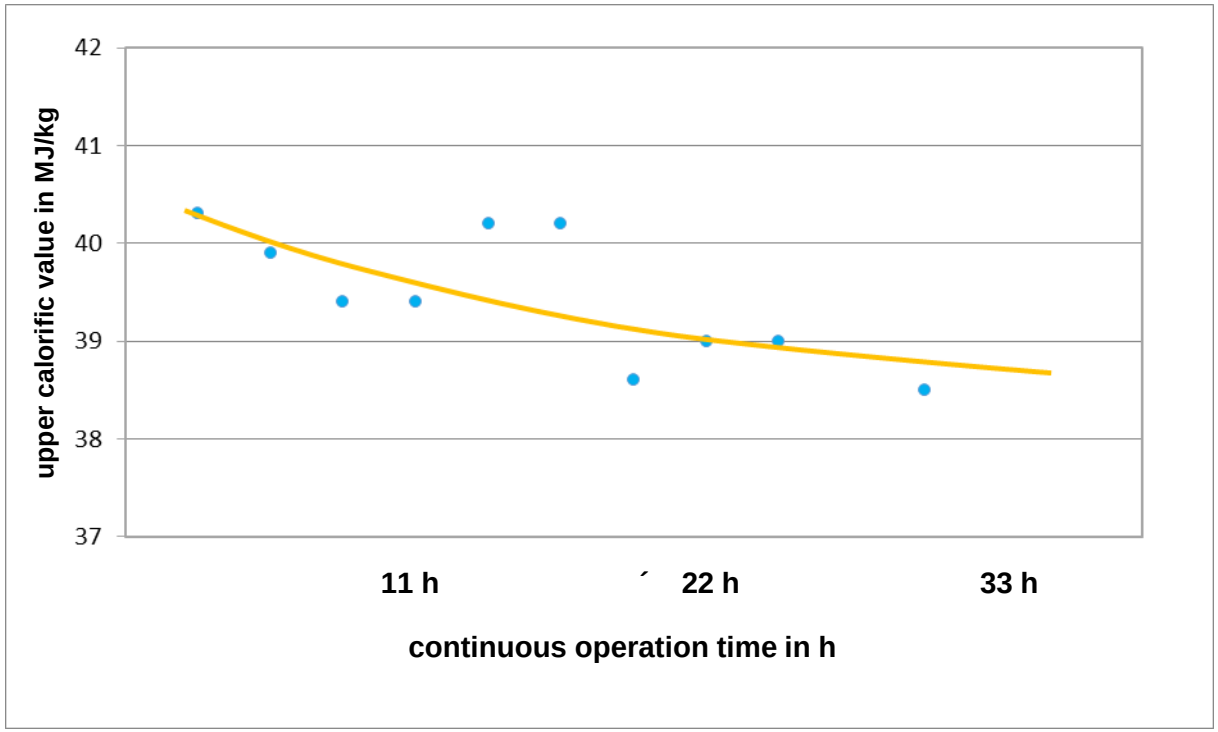

The calorific value of the product oil tends to be stable in long-term continuous operation, indicating sump phase stabilisation

Source: T. Willner: Final Report of the READEST Project, Hamburg 2016

Proof of Long Term Stabilisation of the Sump Phase
with Triglycerides as Model Substances: e.g. CVO from Waste Fat

READi™ Process:

Cracking & Deoxygenation

Waste Fat
100 %
Energy 37 MJ/kg
Oxygen 11 m%
Viscosity (40°C) 44 mm²/s
Density (15°C) 925 kg/m³

CVO
*78 m% = **86 en%***
Energy 41 MJ/kg
Oxygen 5 m%
Viscosity (40°C) 3,8 mm²/s
Density (15°C) 843 kg/m³

CVO = Cracked Vegetable Oil

READi™ Process for CVO Production: Mass and Energy Balance

Waste fat	+ Energy
100 m%	
37 MJ/kg	
100 en%	**4 en%**

CVO +	H Oil +	R +	Gas +	W +	Heat
78 m%	**4 m%**	**4 m%**	**10 m%**	**4 m%**	
41 MJ/kg	40 MJ/kg	28 MJ/kg	16 MJ/kg	0 MJ/kg	
86 en%	**4 en%**	**3 en%**	**4 en%**	**0 en%**	**7 en%**

CVO = cracked vegetable oil, H Oil = heavy oil, R = solid residue, W = water phase

CVO Boiling Curve (Black Curve)

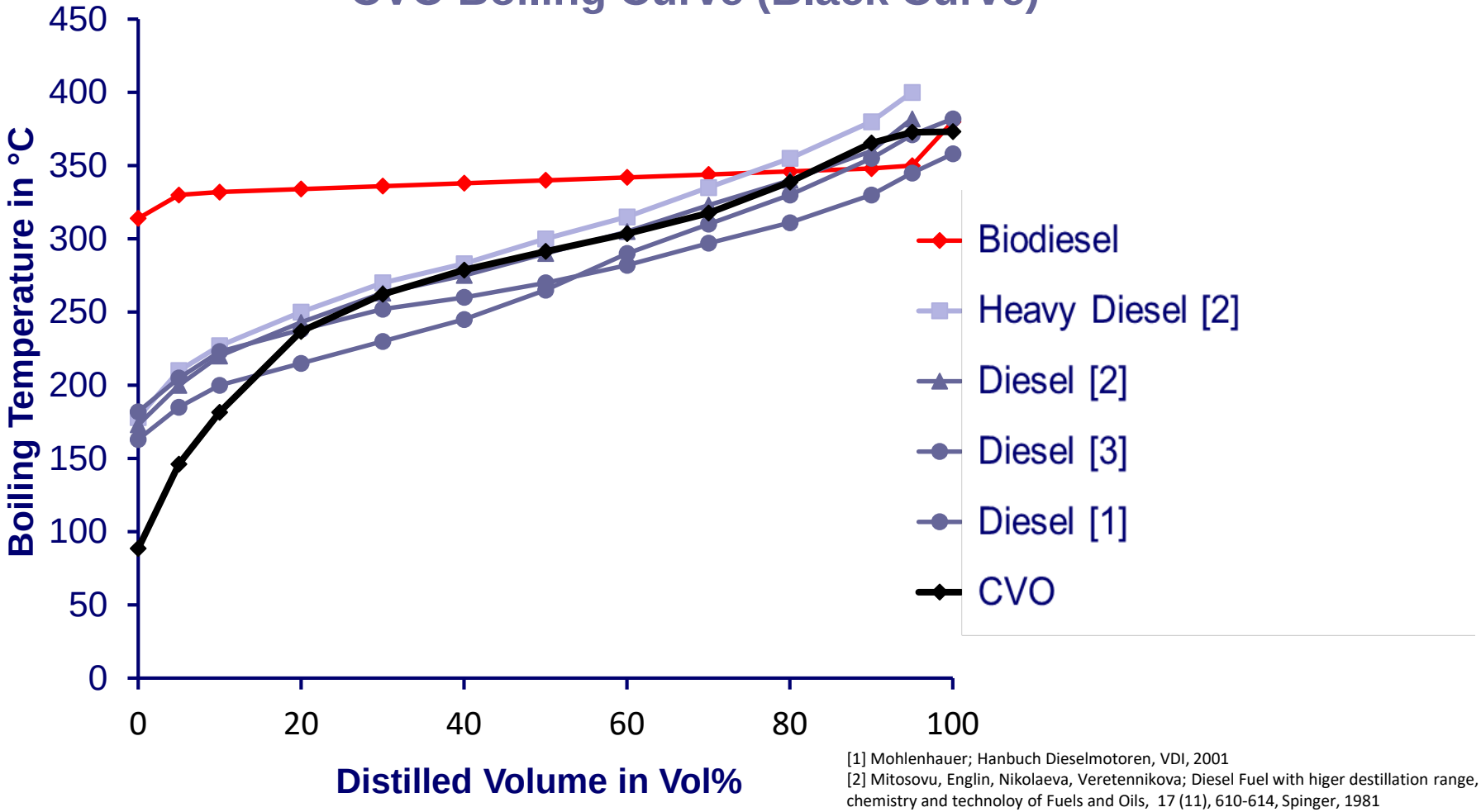

[1] Mohlenhauer; Hanbuch Dieselmotoren, VDI, 2001
[2] Mitosovu, Englin, Nikolaeva, Veretennikova; Diesel Fuel with higer destillation range, chemistry and technoloy of Fuels and Oils, 17 (11), 610-614, Spinger, 1981
[3] Aral AG, Dieselkraftstoff, Fachreihe Forschung und Technik, Bochum, 1995

V047 RSO

Drop-in Fuels from Waste Oil

Waste Oil

READi^{TM} Process:

Cracking & Deoxygenation

CVO

Hydrotreating & Refining

HCVO (Fuel)

Business case study for an annual fuel capacity of 50 000 t:

Fuel production costs (without feedstock): 230 €/t

Investment: 46 million €

CVO = cracked vegetable oil, HCVO = hydrotreated CVO

Next Steps for the Scale-up of the READi™ Process

Current development status: TRL 5 (200 kg/week)

X-Energy project:

Project phase 1 (2018-2021): TRL 6-7 (100-1000 t/a)
Project phase 2 (2021-2025): TRL 7-8 (1000-10000 t/a)

BMBF Program „FH Impuls“

SPONSORED BY THE
Federal Ministry of Education and Research

FORSCHUNG AN FACHHOCHSCHULEN

Hochschule für Angewandte Wissenschaften Hamburg
Hamburg University of Applied Sciences

CC4E
Competence Center für Erneuerbare Energien & EnergieEffizienz

XENERGY

NEXXOIL

Prof. Dr.-Ing. Thomas Willner
Chemical Engineering
April 2018

Next Steps for the Solvolytic Liquefaction of Lignocellulosics

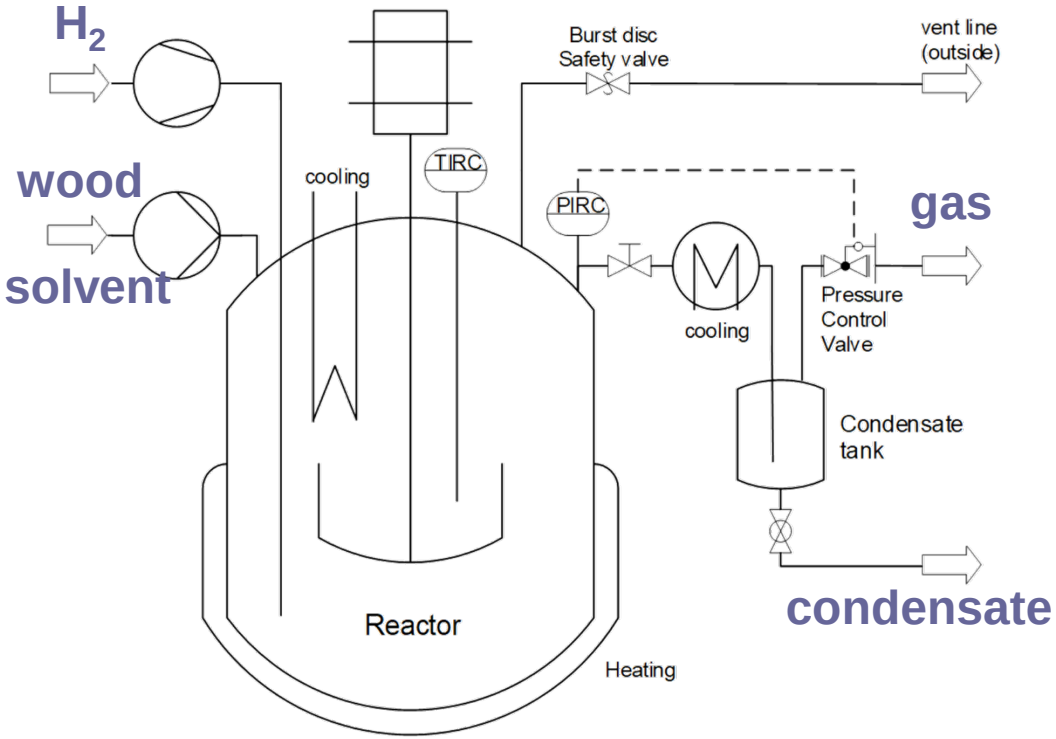

PhD project 2017-2020: Cont. sump phase wood liquefaction with H_2

Prof. Dr.-Ing. Thomas Willner
Chemical Engineering
April 2018

Hochschule für Angewandte Wissenschaften Hamburg
Hamburg University of Applied Sciences

Next Steps for the Solvolytic Liquefaction of Lignocellulosics

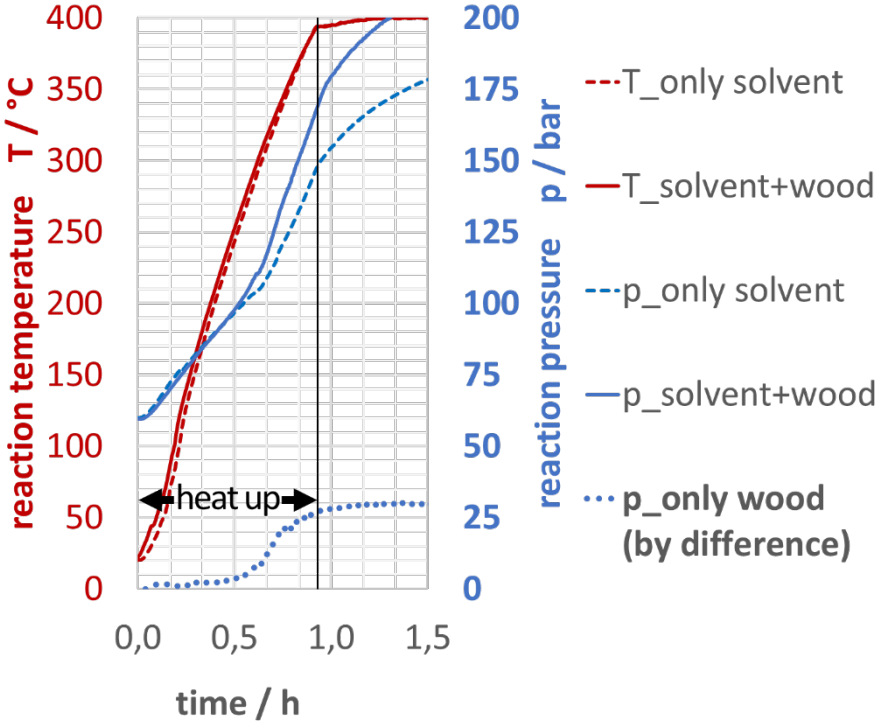

PhD project: First batch tests with softwood tar under pressure

Prof. Dr.-Ing. Thomas Willner
Chemical Engineering
April 2018

Hochschule für Angewandte Wissenschaften Hamburg
Hamburg University of Applied Sciences

Thank you